19.Cylinder Head

A: REMOVAL

NOTE:
Perform the work with the engine installed to body when replacing a single part. Refer to “Valve Clearance” for preparation. <Ref. to ME(H4DOTC)-32, Valve Clearance.>

1) Remove the V-belts. <Ref. to ME(H4DOTC)-44, REMOVAL, V-belt.>
2) Remove the crank pulley. <Ref. to ME(H4DOTC)-46, REMOVAL, Crank Pulley.>
3) Remove the timing belt cover. <Ref. to ME(H4DOTC)-47, REMOVAL, Timing Belt Cover.>
4) Remove the timing belt. <Ref. to ME(H4DOTC)-48, REMOVAL, Timing Belt.>
5) Remove the cam sprocket. <Ref. to ME(H4DOTC)-56, REMOVAL, Cam Sprocket.>
6) Remove the intake manifold. <Ref. to FU(H4DOTC)-17, REMOVAL, Intake Manifold.>
7) Remove the bolt which installs the A/C compressor bracket on cylinder head.
8) Remove the camshaft. <Ref. to ME(H4DOTC)-58, REMOVAL, Camshaft.>
9) Remove the cylinder head bolts in alphabetical order shown in the figure.
Leave the bolts (A) and (D) engaged by three or four threads to prevent the cylinder head from falling.

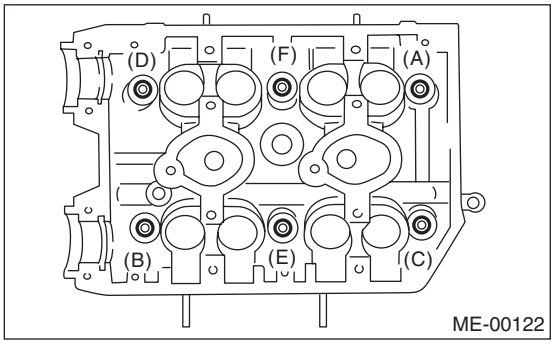

10) While tapping the cylinder head with a plastic hammer, separate it from cylinder block. Remove the bolts (A) and (D) to remove cylinder head.

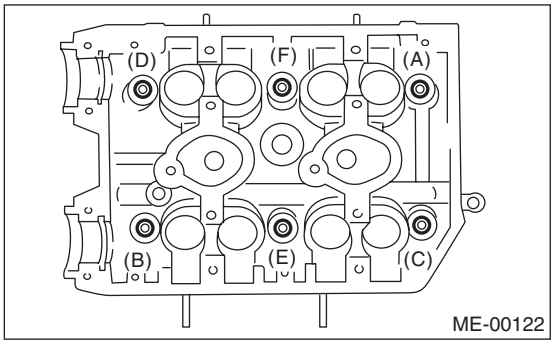

11) Remove the cylinder head gasket.

CAUTION:
Be careful not to scratch the mating surface of the cylinder head and cylinder block.

12) Similarly, remove the cylinder head (RH).

B: INSTALLATION

1) Install the cylinder head and gaskets on cylinder block.

CAUTION:
Be careful not to scratch the mating surface of the cylinder head and cylinder block.

NOTE:
Use a new cylinder head gasket.

2) Tighten the cylinder head bolts.
   (1) Apply a thin coat of engine oil to washer and bolt thread.
   (2) Tighten all bolts to 29 N·m (3.0 kgf-m, 22 ft-lb) in alphabetical order.
   (3) Further tighten all bolts to 69 N·m (7.0 kgf-m, 51 ft-lb) in alphabetical order.
   (4) Loosen all the bolts by 180° in reverse order of installation, and loosen again by 180°.
   (5) Tighten all bolts to 49 N·m (5.0 kgf-m, 36 ft-lb) in alphabetical order.
   (6) Tighten all bolts by 80 to 90° in alphabetical order.
   (7) Tighten all bolts by 40 to 45° in alphabetical order.

CAUTION:
Do not tighten the bolts 45° or more.

   (8) Further tighten the bolts (A) and (B) by 40 to 45°.

CAUTION:
Make sure that the total “re-tightening angle” of the previous steps (7) and (8) does not exceed 90°.

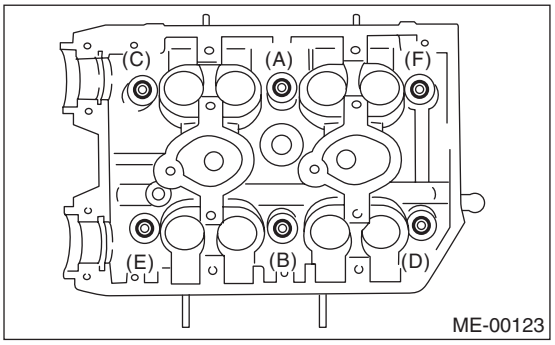

3) Install the camshaft. <Ref. to ME(H4DOTC)-59, INSTALLATION, Camshaft.>
4) Install the A/C compressor bracket on cylinder head.
5) Install the intake manifold. <Ref. to FU(H4DOTC)-20, INSTALLATION, Intake Manifold.>

6) Install the cam sprocket. <Ref. to ME(H4DOTC)-56, INSTALLATION, Cam Sprocket.>
7) Install the timing belt. <Ref. to ME(H4DOTC)-50, INSTALLATION, Timing Belt.>
8) Install the timing belt cover. <Ref. to ME(H4DOTC)-47, INSTALLATION, Timing Belt Cover.>
9) Install the crank pulley. <Ref. to ME(H4DOTC)-46, INSTALLATION, Crank Pulley.>
10) Install the V-belts. <Ref. to ME(H4DOTC)-44, INSTALLATION, V-belt.>

C: DISASSEMBLY

1) Remove the valve lifter.
2) Compress the valve spring and remove the valve spring retainer key. Remove each valve and valve spring.

NOTE:
- Mark each valve to prevent confusion.
- Pay careful attention not to damage the lips of intake valve oil seals and exhaust valve oil seals.
- Keep all the removed parts in order for re-installing in their original positions.

ST1 498267600 CYLINDER HEAD TABLE
ST2 499718000 VALVE SPRING REMOVER

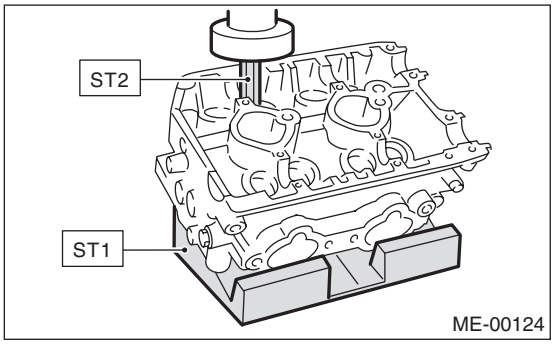

D: ASSEMBLY

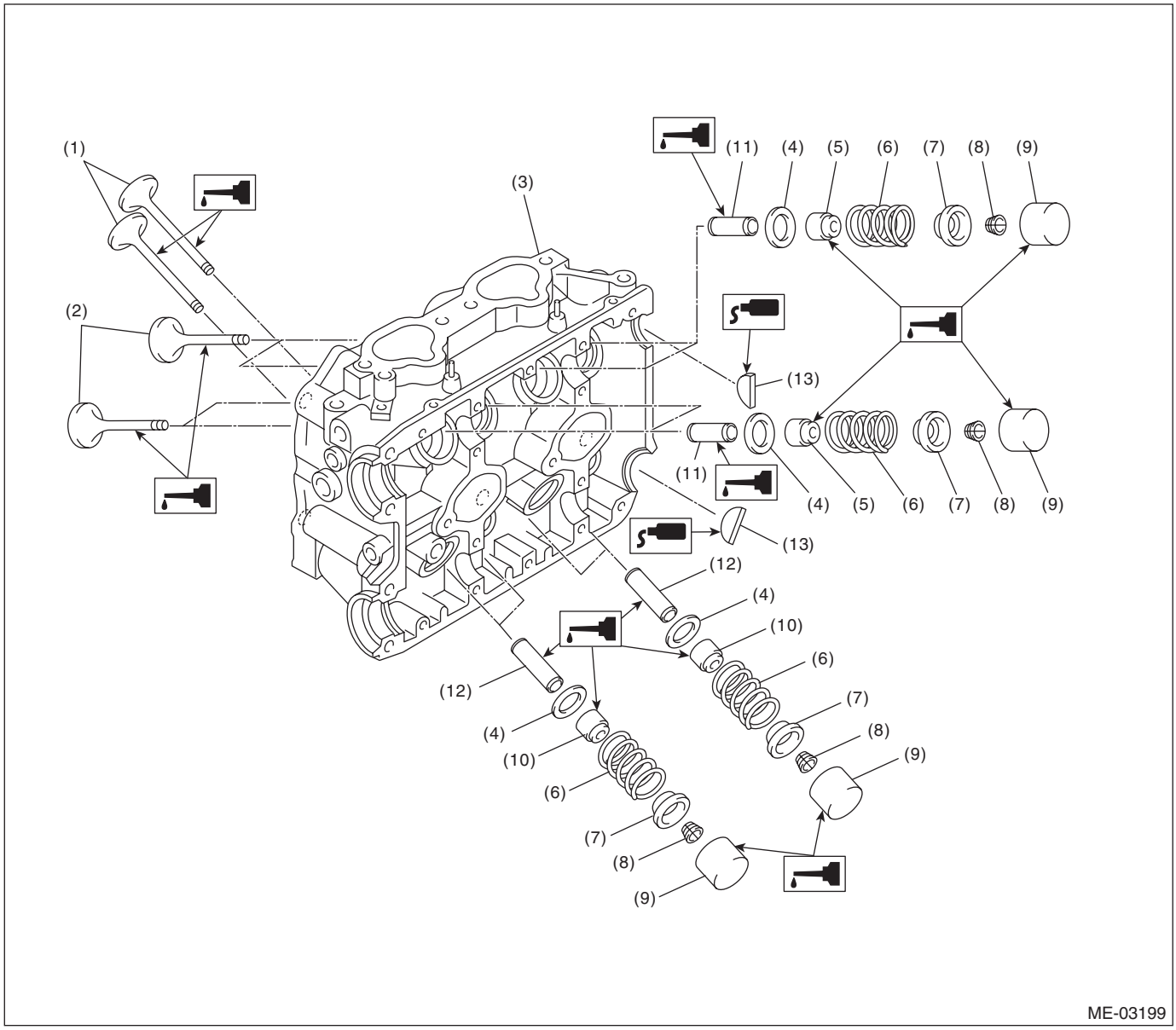

(1)	Exhaust valve	(6)	Valve spring	(10)	Exhaust valve oil seal
(2)	Intake valve	(7)	Retainer	(11)	Intake valve guide
(3)	Cylinder head	(8)	Retainer key	(12)	Exhaust valve guide
(4)	Valve spring seat	(9)	Valve lifter	(13)	Plug
(5)	Intake valve oil seal				

1) Install the valve spring and valve.
   (1) Coat the stem of each valve with engine oil and insert the valve into the valve guide.

NOTE:
When inserting the valve into valve guide, use special care not to damage the oil seal lip.

   (2) Set the cylinder head on ST1.
   (3) Install the valve spring and retainer using ST2.

NOTE:
Be sure to install the valve spring with its close-coiled end facing the seat on cylinder head.

ST1 498267600 CYLINDER HEAD TABLE
ST2 499718000 VALVE SPRING REMOVER

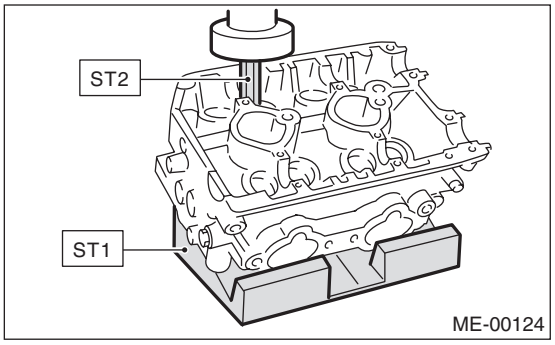

   (4) Compress the valve spring and install the retainer key.
   (5) After installing, tap the valve spring retainers lightly with a wooden hammer for better seating.
2) Apply oil to the surfaces of the valve lifter.
3) Install the valve lifter.

E: INSPECTION

1. CYLINDER HEAD

1) Check for cracks or damage. Use liquid penetrant tester on the important sections to check for fissures. Check that there are no marks of gas leaking or water leaking on gasket installing surface.
2) Measure the warping of the cylinder head surface that mates with cylinder block using a straight edge (A) and thickness gauge (B).
If the warping exceeds the limit, correct the surface by grinding it with a surface grinder.

Service limit:
0.035 mm (0.0014 in)

Grinding limit:
0.3 mm (0.012 in)

Standard height of cylinder head:
127.5 mm (5.02 in)

NOTE:
Uneven torque for the cylinder head bolts can cause warping. When reinstalling, pay special attention to the torque so as to tighten evenly.

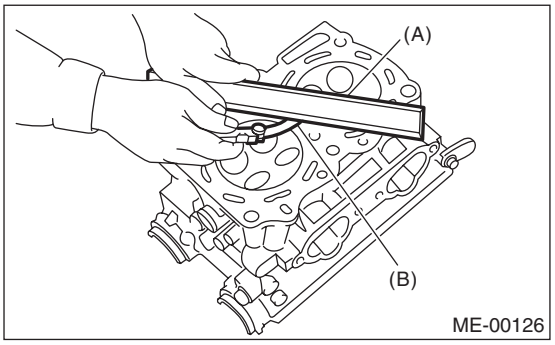

2. VALVE SEAT

Inspect the intake and exhaust valve seats, and correct the contact surfaces with a valve seat cutter if they are defective or when valve guides are replaced.

Valve seat width W:

Standard:
Intake
0.6 — 1.4 mm (0.024 — 0.055 in)
Exhaust
1.2 — 1.8 mm (0.047 — 0.071 in)

Service limit:
Intake
1.7 mm (0.067 in)
Exhaust
2.2 mm (0.087 in)

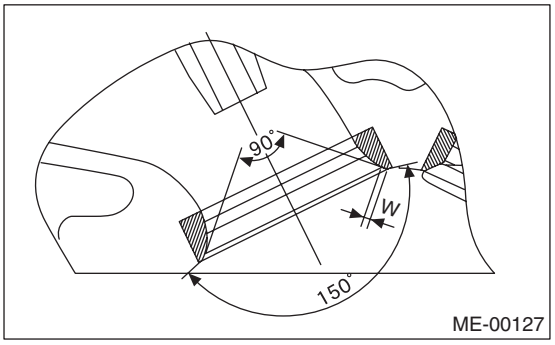

3. VALVE GUIDE

1) Check the clearance between valve guide and stem. The clearance can be checked by measuring respectively the outer diameter of valve stem with a micrometer and the inner diameter of valve guide with a caliper gauge.

Clearance between the valve guide and valve stem:

Standard:
Intake
0.030 — 0.057 mm (0.0012 — 0.0022 in)
Exhaust
0.040 — 0.067 mm (0.0016 — 0.0026 in)

Service limit:
0.15 mm (0.0059 in)

2) If the clearance between the valve guide and stem exceeds the limit, replace the valve guide or the valve itself, whichever shows greater amount of wear. See the following procedure for valve guide replacement.

Valve guide inner diameter:
6.000 — 6.012 mm (0.2362 — 0.2367 in)

Valve stem outer diameters:
Intake
5.955 — 5.970 mm (0.2344 — 0.2350 in)
Exhaust
5.945 — 5.960 mm (0.2341 — 0.2346 in)

(1) Place the cylinder head on ST1 with the combustion chamber upward so that valve guides fit the holes in ST1.

(2) Insert the ST2 into valve guide and press it down to remove the valve guide.

ST1 498267600 CYLINDER HEAD TABLE
ST2 499767200 VALVE GUIDE REMOVER

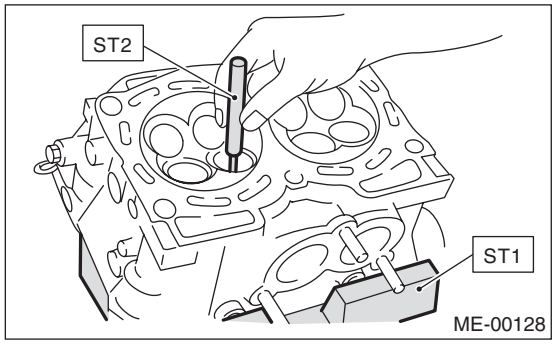

(3) Turn the cylinder head upside down and place the ST as shown in the figure.

ST 18251AA020 VALVE GUIDE ADJUSTER

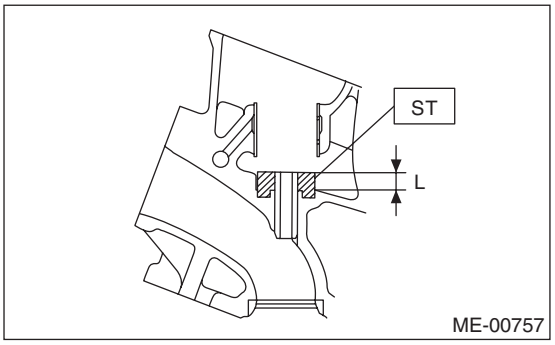

(4) Before installing a new valve guide, make sure that neither scratches nor damages exist on the inner surface of valve guide holes in cylinder head.

(5) Put a new valve guide, coated with sufficient oil, in the cylinder head, and insert the ST1 into valve guide. Press in until the valve guide upper end is flush with the upper surface of ST2.

ST1 499767200 VALVE GUIDE REMOVER
ST2 18251AA020 VALVE GUIDE ADJUSTER

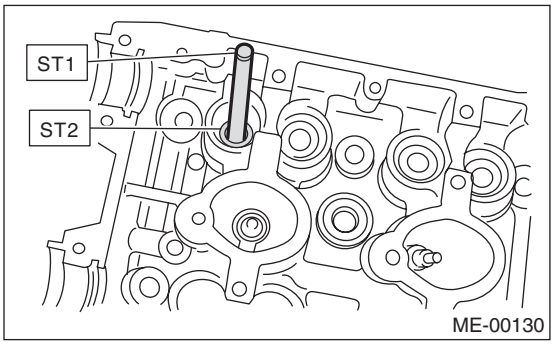

(6) Check the valve guide protrusion.

Valve guide protrusion L:
15.8 — 16.2 mm (0.622 — 0.638 in)

(7) Insert the ST in valve guide, and rotate the ST slowly clockwise while pushing it lightly. Bring the ST back while rotating it clockwise.

ST 499767400 VALVE GUIDE REAMER

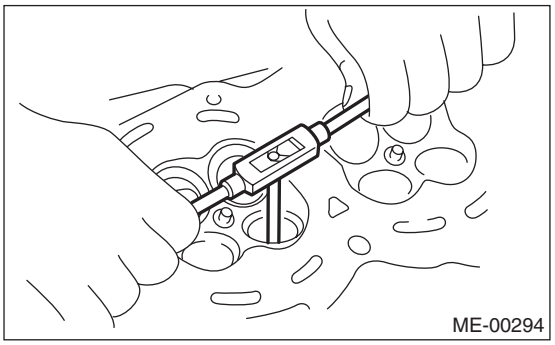

NOTE:
- Apply engine oil to the ST when reaming.
- If the inner surface of valve guide is damaged, the edge of ST should be slightly ground with oil stone.
- If the inner surface of valve guide becomes lustrous and the ST does not chip, use a new ST or remedy the ST.

(8) After reaming, clean the valve guide to remove chips.

(9) Recheck the contact condition between valve and valve seat after replacing the valve guide.

4. INTAKE AND EXHAUST VALVE

1) Inspect the flange and stem of valve, and replace if damaged, worn, or deformed, or if "H" is outside of the specified limit.

Head edge thickness H:

Standard:
Intake (A)
1.0 — 1.4 mm (0.039 — 0.055 in)
Exhaust (B)
1.3 — 1.7 mm (0.051 — 0.067 in)

Service limit:
0.8 mm (0.031 in)

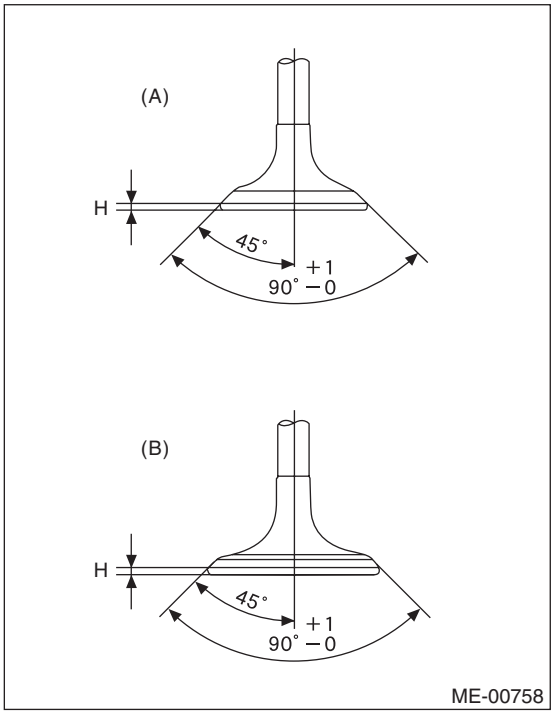

2) Put a small amount of grinding compound on the seat surface, and lap the valve and valve seat. Install a new valve oil seal after lapping.

NOTE:
It is possible to differentiate between the intake valve and the exhaust valve by their overall length.

Valve overall length:
Intake
104.4 mm (4.110 in)
Exhaust
104.65 mm (4.120 in)

5. VALVE SPRING

1) Check the valve springs for damage, free length, and spring constant. Replace the valve spring if it is not within standard values presented in the table.

Free length		47.32 mm (1.863 in)
Tension/spring height	Set	205 — 235 N (20.9 — 24.0 kgf, 46.1 — 52.8 lbf) /36.0 mm (1.417 in)
	Lift	426 — 490 N (43.4 — 50.0 kgf, 95.8 — 110 lbf) /26.50 mm (1.043 in)
Squareness		2.5°, 2.1 mm (0.083 in) or less

2) To measure the squareness of the valve spring, stand the spring on a surface plate and measure its deflection at the top of spring using a try square.

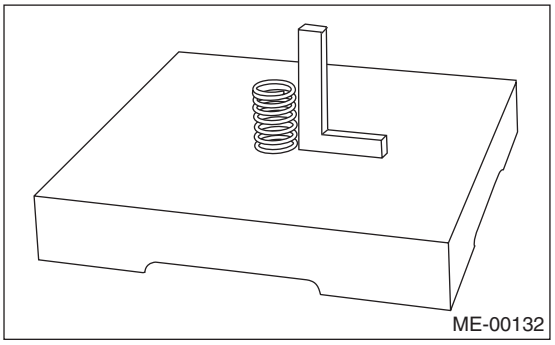

6. INTAKE AND EXHAUST VALVE OIL SEAL

Replace the oil seal in the following cases:
- When the lip is damaged.
- When the spring is out of the specified position.
- When readjusting the surfaces of valve and valve seat.
- When replacing the intake valve guide.

1) Set the cylinder head on ST1.
2) Using the ST2, press-fit the oil seal.

NOTE:
- Apply engine oil to oil seal before press-fitting.
- When press-fitting the oil seal, do not use a hammer or strike in.
- The intake valve oil seal and exhaust valve oil seal can be distinguished by colors.

Color of rubber part:
Intake [Gray]
Exhaust [Green]

ST1 498267600 CYLINDER HEAD TABLE
ST2 498857100 VALVE OIL SEAL GUIDE

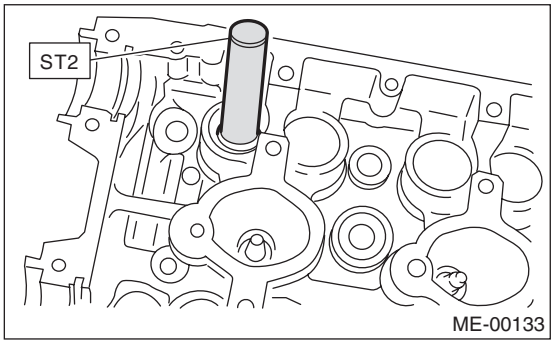

7. VALVE LIFTER

1) Check the valve lifter visually.
2) Measure the outer diameter of valve lifter.

Outer diameter:
34.959 — 34.975 mm (1.3763 — 1.3770 in)

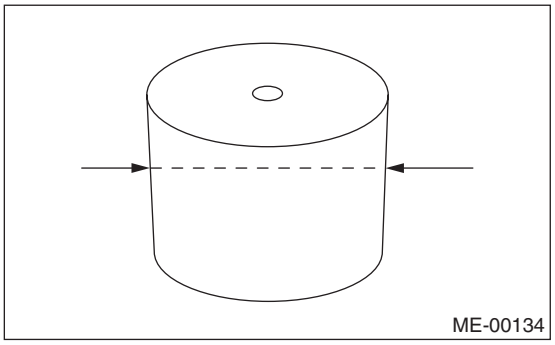

3) Measure the inner diameter of valve lifter mating surface on cylinder head.

Inner diameter:
34.994 — 35.016 mm (1.3777 — 1.3786 in)

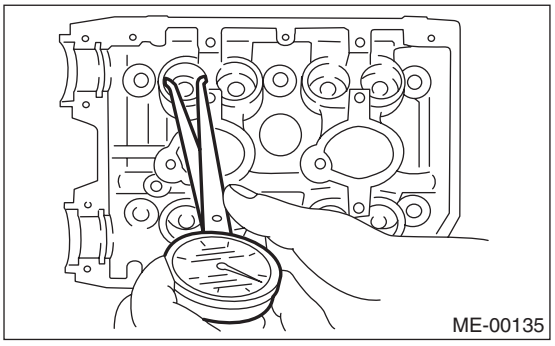

NOTE:
If difference between outer diameter of valve lifter and inner diameter of its mating surface exceeds the standard or there is uneven wear on the inner surface, replace the cylinder head.

Standard:
0.019 — 0.057 mm (0.0007 — 0.0022 in)

Service limit:
0.100 mm (0.0039 in)